STRAIGHT AND LEVEL GUARDRAILING

(using Types 10, 15, 20, 21, 25 & 26)

Where:

L = distance between centres of uprights
l = length of horizontal tube
H= distance from ground to centre line of top rail
h = length of upright tube

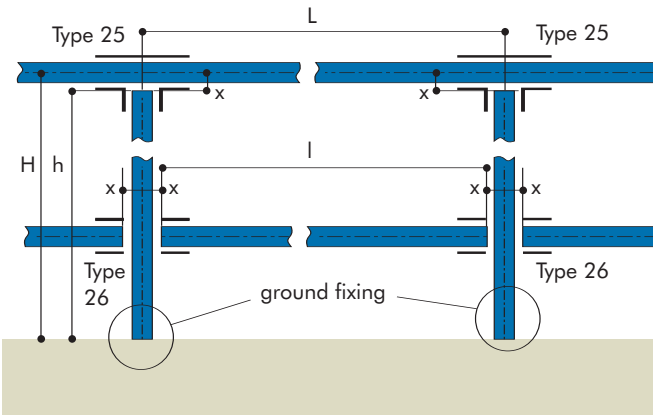

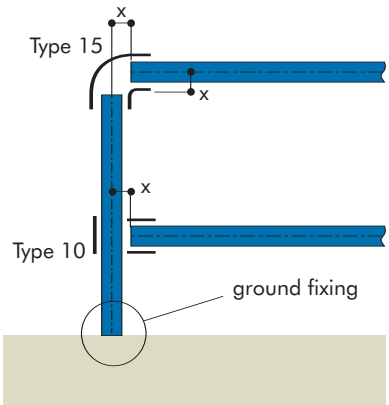

Table 1 gives details of dimension 'x' in the formula

l = L - 2x for calculating rail lengths and uprights

h = H - x ± (ground fixing).

Table 1

Kee Klamp Fitting Size	x (mm)
2	-10
3	-12
4	-13
5	-14
6	-17
7	-22
8	-25
9	-30

NB: When reducing fittings are being used care must be taken to use the correct 'x' dimension.

Example, Type 10-87 (vertical tube size 8, horizontal tube size 7). To find the correct length of the horizontal tube, the length 'x' is that for the size 8 vertical tube.

When using Types 35 and 40 the above 'x' dimension should be used.

Although guardrailing is normally constructed in size 6, 7 and 8 tubing, Table 1 shows the cutting length for all Kee Klamp tube sizes, and can therefore be applied to many other rectangular structures.

GUARDRAILING UP SLOPES 0°-45° USING MACHINED FITTINGS

Where the upright remains vertical, i.e. ramps and stairways, (using Types 27, 28, 29)

(i) dimension 'x' to be subtracted from the upright centres dimension measured on the slope to give rail length. (l = L - 2x)

(ii) dimension 'y' to be added to the centre dimension to give the length of the upright. (h = H + Y + ground fixing)

NB: between angles of 30° and 45° Type 29 fitting may be used to terminate the handrail, but for angles of less than 30° use a Type 10 with the rail bent to fit.

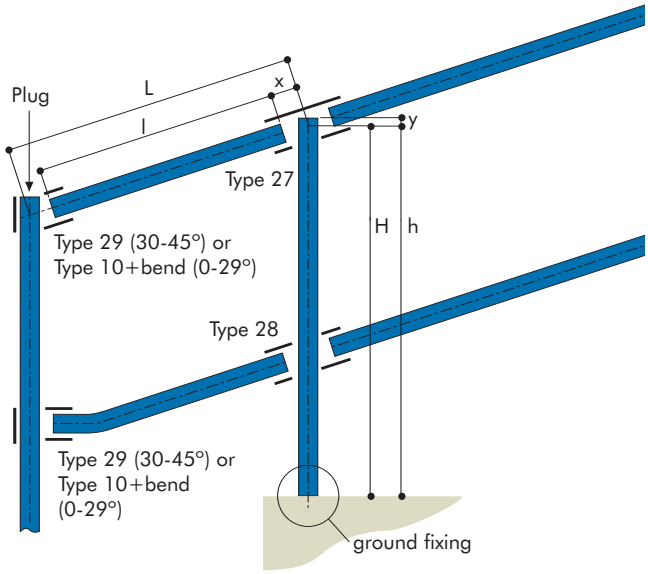

Table 2 gives details of dimensions required for calculating the rail lengths, where angles are between 0° and 45°.

Table 2: Rails

Angle of Slope°	Size 6 Fittings x (mm)	Size 7 Fittings x (mm)	Size 8 Fittings x (mm)
0° to 4°	-19	-22	-25
5° to 9°	-22	-25	-28
10° to 11°	-25	-28	-30
15°	-25	-32	-35
20°	-28	-32	-38
25°	-32	-35	-41
30°	-35	-41	-44
35°	-38	-44	-51
40°	-41	-48	-57
45°	-48	-54	-63

Table 3 gives details of dimensions required for calculating the upright lengths, where angles are between 0° and 45°.

Table 3: Uprights

Angle of Slope°	Size 6 Fittings y (mm)	Size 7 Fittings y (mm)	Size 8 Fittings y (mm)
0° to 4°	+19	+22	+25
5° to 9°	+16	+19	+22
10° to 11°	+16	+16	+19
15°	+13	+16	+19
20°	+13	+13	+16
25°	+9	+13	+16
30°	+9	+13	+13
35°	+9	+9	+13
40°	+6	+9	+9
45°	+6	+6	+9

GUARDRAILING UP SLOPES 0°-11°

Where the upright remains vertical, i.e. ramps and stairways, (using Types 86, 87, 88 and 89 - size 8 only)

(i) dimension 'x' to be subtracted from the upright centres dimension measured on the slope to give rail length. (l = L - 2x)

(ii) dimension 'y' to be subtracted from the centre dimension to give the length of the upright. (H = h + Y + ground fixing)

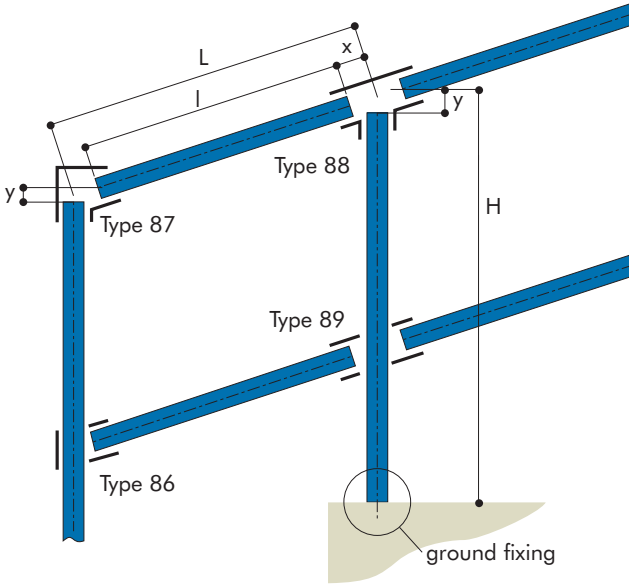

Table 4 gives details of dimensions required for calculating the rail lengths, where angles are between 0° and 11°.

Table 4: Rails

Angle of Slope°	Size 8 Fittings x (mm)
0° to 4°	-25
5° to 9°	-28
10° to 11°	-30

Table 5 gives details of dimensions required for calculating the upright lengths, where angles are between 0° and 11°.

Table 5: Uprights

Angle of Slope°	Size 8 Fittings y (mm)
0° to 4°	-25
5° to 9°	-28
10° to 11°	-30

GUARDRAILING UP SLOPES 30°-45° USING ADJUSTABLE FITTINGS

Where upright remains vertical i.e. stairways (using Types 29,30,55 and 56 - size 8 only)

(i) dimension x, y or z to be subtracted from uprights centre. Dimension (L), to give the rail length.

(ii) dimension u, v and w for determining the upright length.

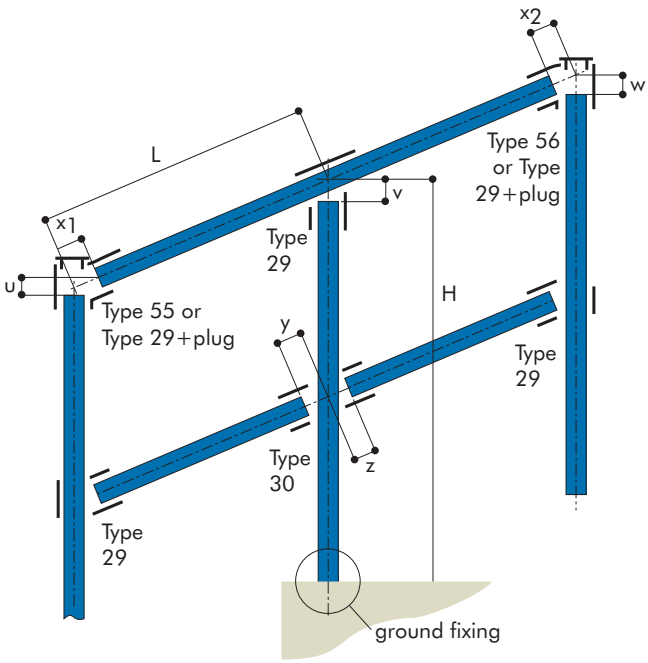

Table 6 gives details of dimensions required for calculating the rail lengths, where angles are between 30° and 45°.

Table 6: Rails using Type 29 & 30 fittings

Angle of Slope°	Size 6 Fitting			Size 7 Fitting			Size 8 Fitting		
	x (mm)	y (mm)	z (mm)	x (mm)	y (mm)	z (mm)	x (mm)	y (mm)	z (mm)
30°	-31	-54	-36	-40	-64	-41	-45	-77	-54
35°	-34	-51	-39	-44	-61	-44	-50	-73	-57
40°	-37	-48	-42	-48	-57	-48	-55	-64	-61
45°	-43	-45	-45	-54	-53	-52	-61	-65	-66

Table 7 gives details of dimensions required for calculating the upright lengths, where angles are between 30° and 45°.

Table 7: Uprights using Type 29 & 30 fittings

Angle of Slope°	Size 6 Fitting			Size 7 Fitting			Size 8 Fitting		
	u (mm)	v (mm)	w (mm)	u (mm)	v (mm)	w (mm)	u (mm)	v (mm)	w (mm)
30°	+36	-31	+24	+44	-40	+29	+46	-45	+33
35°	+42	-34	+18	+52	-44	+21	+55	-50	+24
40°	+49	-37	+11	+61	-48	+12	+65	-55	+14
45°	+58	-43	+2	+71	-54	+2	+77	-61	+2

Table 8: uprights and rails using Type 55 & 56 - size 8 only

	u (mm)	x_1 (mm)	w (mm)	x_2 (mm)
20° to 29°	-18	-18	-50	-50
30° to 39°	-16	-16	-60	-60
40° to 49°	-14	-14	-70	-70
50° to 59°	-12	-12		
60° to 69°	-10	-10		
70° to 79°	-8	-8		
80° to 88°	-6	-6		

SHELVING

(using Type 46)

Shelving with carrying rails positioned on the outside of the upright.

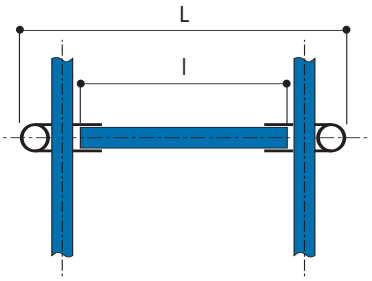

Table 9 gives the dimension 'x' to be subtracted from overall shelf width 'L' to give the length of the cross rail in the formula l = L - x.

Table 9

Kee Klamp Fitting Size	x (mm)
4	-98
5	-134
6	-162
7	-196
8	-228
9	-276

CONSTRUCTION OF BRACES AND STRUTS

(using Types C50, C51 and C52)

For economical use of tubing, Types F50-5 to F50-9 can all be combined with:

M50-5 to M50-9

M51-5 to M51-9

M52-5 to M52-8

to construct combination fittings, for example:

C50-75, C50-85, C51-655 and C52-855.

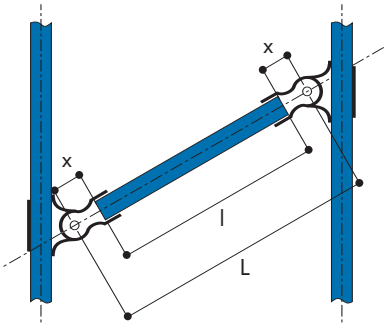

Table 10 gives details of dimension 'x' to be subtracted to give the tube length required for use with the fitting F50.

Table 10

Kee Klamp Fitting Size	x (mm)
4	-14
5	-25
6	-25
7	-25
8	-25
9	-32

NB: Dimension 'L' must be established by direct measurement, since it is dependant on the proposed angle of the strut.

PALLET RACKING

(using Type 46)

Pallet racking with the carrying rails on the inside of the upright.

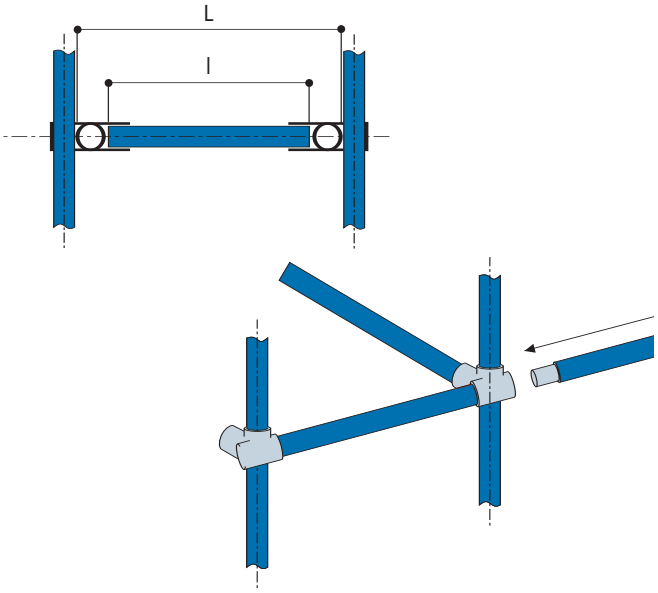

Table 11 gives dimension 'x' which must be subtracted from the overall width of the carrying rails, to give the length of the cross rail in the formula l = L - x

Table 11

Kee Klamp Fitting Size	x (mm)
4	-48
5	-59
6	-72
7	-85
8	-102
9	-126

Pallet racking is not recommended in less than size 7 tubing.

The length of the longitudinal member can be calculated from multiples of the length of the bay between the centres of uprights, plus dimension 'z' in Table 12. This applies to constructions using fitting Type 45.

Table 12

Kee Klamp Fitting Size	z (mm)
3	+24
4	+28
5	+31
6	+38
7	+46
8	+51
9	+61

Longitudinal tubes are joined using fittings Type 14 or 18, which must be positioned to occur at the edge of the Type 46 fitting, and must not all occur in the same bay at alternate levels.

Spigots can be either tubes or rods, riveted into position, or the Kee Klamp Type 18 fitting. When using the latter, a gap of 20mm must be allowed for the set screw fixing.

BASE & WALL FIXINGS

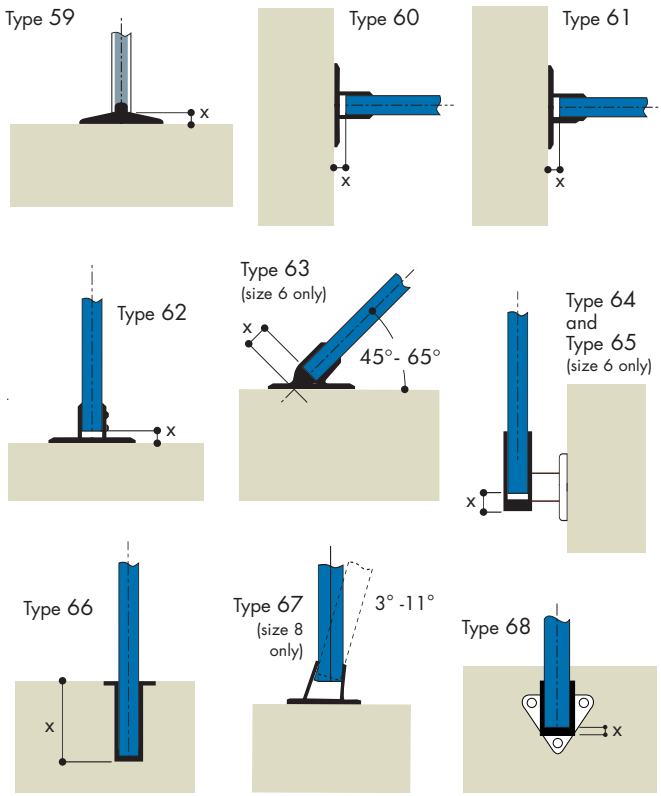

Table 13 gives details of the ground fixing dimension 'x', to be subtracted from the height 'H' to give the length of the upright 'h'.

Table 13

Flange Type	x (mm)
59	-10
60	-10
61	-6
62	-6
67	-6

Table 14 gives details of the ground fixing dimension 'x', for Type 63-6 only, to be subtracted to give the length of the upright for each angle condition.

Table 14

Angle°	x (mm)
45°	-38
50°	-32
60°	-25
65°	-12

Table 15 gives the dimension 'x' to be subtracted from the length of the upright for fittings, Types 64, 65, 67 and 68.

Table 15

Kee Klamp Fitting Size	x (mm)
6	-5
7	-6
8	-6

Table 16 gives the ground fixing dimension 'x', to be added to the upright member to allow for the setting into the socket Type 66.

Table 16

Kee Klamp Fitting Size	x (mm)
6	+115
7	+127
8	+127

PEDESTRIAN GUARDRAILING

(using Types 90, 91, 92, 93 and 95)

This construction is used when individual rails are required to be removable and when the site is not straight and level. Slopes of up to 7° or radii greater than six metres can be accommodated without bending the tubing.

When bending the tube around a corner, a Type 95 PGR spigot must be included to prevent sagging. Holes of 15mm diameter must be drilled through both walls of the upright, one at 25mm from the top of the upright tube and the other on the centre line of any horizontal rails.

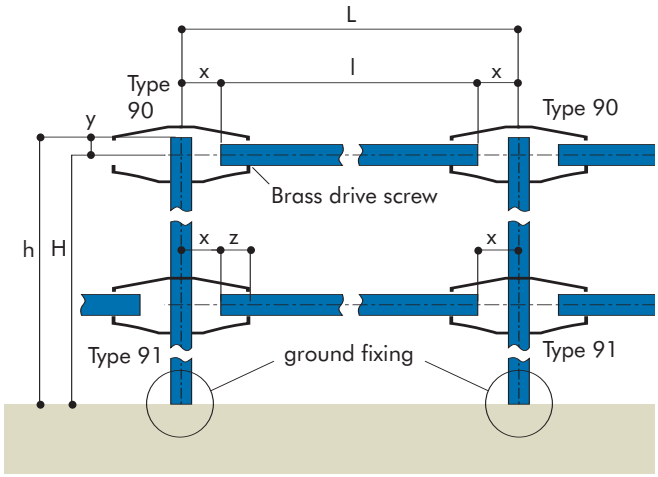

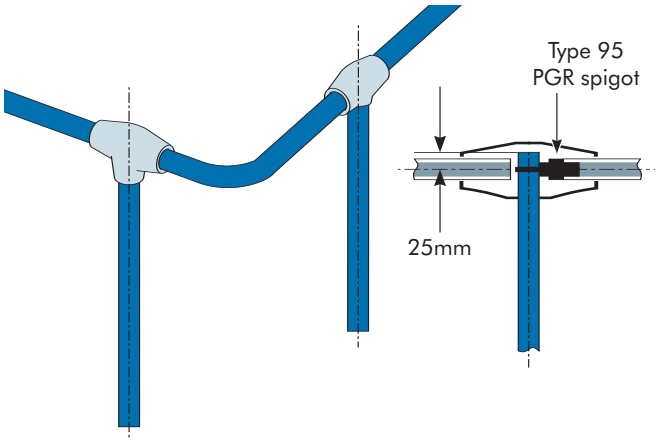

Table 17 gives details of:

(i) Dimension 'x' in the formula l = L - 2x for calculating the rail lengths where:

L = distance between the centres of the uprights
l = length of the horizontal tube.

(ii) Dimension 'y' in the formula h = H + y + (ground fixing) for calculating the upright length where:

H= distance from ground to the centre line of the top rail
h = length of upright tube.

Table 17

Kee Klamp Fitting Size	x (mm)	y (mm)
8	-66	+25

A brass drive screw (No 6 x 10mm) is located at dimension 'z', in Table 18, on one end only for each horizontal tube. This positions the horizontal tube within the Kee Klamp Fitting to give location relative to the set screws.

Table 18

Kee Klamp Fitting Size	z (mm)
8	37

WIRE MESH INFILL

Infilling is normally constructed from 50mm x 50mm x 3.2mm, 25mm x 25mm x 3.2mm or 50mm x 25mm x 3.2mm wire mesh welded to a 8mm rod frame, and is fixed into position using standard Kee Klamp Fittings Types 81 and 82.

NB: Types 81 and 82 require cut outs on mesh less than 32mm square.

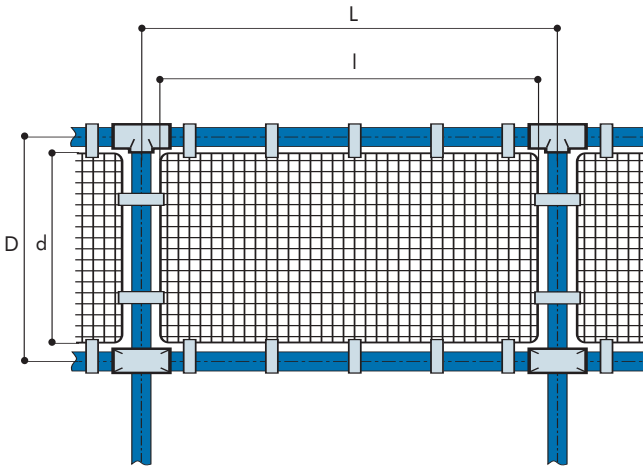

Table 19 gives the dimensions to be subtracted from the centre dimensions 'L' and 'D' of the structure to give the formulae l = L - x and d = D - x.

Table 19

Kee Klamp Fitting Size	x (mm)
5	-60
6	-76
7	-86
8	-89
9	-98

Warning, the spacing of panel clip Types 81 and 82 should not exceed 450mm centres. The safety attachment incorporated in the panel clip Types 81 and 82 cannot be used with mesh less than 32mm.

TUBE BENDING

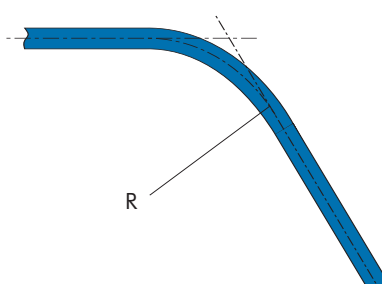

Table 20 gives details of standard radius 'R' of the tube bent by Kee Klamp Ltd.

Table 20

Kee Klamp Fitting Size	R (mm)
3	57
4	57
5	90 or 98
6	102
7	135
8	152
9	203

If the above standard radii are not suitable, tube sizes 5 to 9 can be rolled to any radius above a minimum of 500mm.

RACKING LOAD TABLES

Table 21: Beam load table (kg)

	Fitting size					
	5	**6**	**7**	**8**	**9**	
Span (M)	26.9mm x 2.6	33.7mm x 3.2	Tube size 42.4mm x 3.2	48.3mm x 3.2	60.3mm x 3.6	Span (M)
0.5	540	1060	1750	2380	4000	0.5
0.6	435	850	1407	1870	3250	0.6
0.7	375	730	1207	1595	2760	0.7
0.8	330	645	1063	1385	2420	0.8
0.9	295	579	946	1230	2160	0.9
1.0	265	525	850	1110	1950	1.0
1.1	240	478	770	1013	1775	1.1
1.2	219	438	705	930	1625	1.2
1.3	202	403	651	858	1497	1.3
1.4	187	373	604	796	1387	1.4
1.5	175	347	564	741	1290	1.5
		325	529	693	1205	1.6
		306	499	650	1129	1.7
		290	472	613	1061	1.8
		277	448	581	999	1.9
		268	427	553	987	2.0
			408	528	944	2.1
			391	505	855	2.2
			376	485	818	2.3
			362	467	785	2.4
			349	450	755	2.5
				434	728	2.6
				419	703	2.7
				405	680	2.8
					659	2.9
					639	3.0
					620	3.1
					603	3.2
					588	3.3
Safety Factor 2					575	3.4
					564	3.5

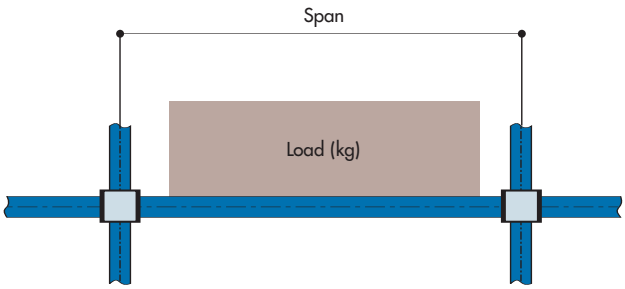

The table gives an indication only of the safe load, uniformly distributed, in kg., that may be carried per shelf consisting of front and back tubes when used as continuous beams.

For uneven load distributions or single spans, the required tube size must be determined by standard bending moment calculations assuming a Kee Klamp joint to give a simply supported beam.

At loads greater than 900 kg consideration must be given to set screw slip.

Table 22: Upright load table (kg)

	Fitting size					
	5	**6**	**7**	**8**	**9**	
Length (M)	26.9mm x 2.6	33.7mm x 3.2	Tube size 42.4mm x 3.2	48.3mm x 3.2	60.3mm x 3.6	Length (M)
0.3	1720	2950	4038	4783	7044	0.3
0.4	1435	2617	3703	4446	6661	0.4
0.5	1150	2284	3368	4109	6278	0.5
0.6	910	1951	3033	3772	5895	0.6
0.7	725	1618	2690	3435	5512	0.7
0.8	590	1348	2363	3098	5129	0.8
0.9	480	1128	2028	2761	4746	0.9
		948	1752	2424	4363	1.0
		798	1524	2134	3980	1.1
			1340	1884	3597	1.2
			1188	1668	3253	1.3
			1066	1484	2951	1.4
				1328	2681	1.5
					2441	1.6
Safety Factor 1.74					2226	1.7
					2032	1.8
					1857	1.9
					1697	2.0

Loads specified are in kg

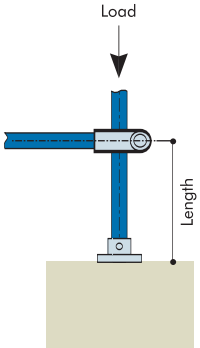

B - un-Fixed

Table 22 gives an indication only of the safe load, in kg., that may be carried between the above restraints by single tubes to BS EN 10255 (ISO 65) when used as uprights.

Table 23: Upright load table (kg)

	Fitting size					
	5	**6**	**7**	**8**	**9**	
Length (M)	26.9mm x 2.6	33.7mm x 3.2	Tube size 42.4mm x 3.2	48.3mm x 3.2	60.3mm x 3.6	Length (M)
0.3	1860	3086	4192	4916	7250	0.3
0.4	1600	2810	3910	4638	6930	0.4
0.5	1360	2534	3628	4360	6610	0.5
0.6	1140	2258	3346	4082	6290	0.6
0.7	940	1982	3064	3804	5970	0.7
0.8	775	1706	2782	3526	5650	0.8
0.9	640	1471	2500	3384	5330	0.9
1.0	540	1269	2235	3248	5010	1.0
		1092	1995	2970	4690	1.1
		937	1779	2692	4370	1.2
			1587	2414	4050	1.3
			1417	2169	3730	1.4
			1265	1954	3410	1.5
			1130	1764	3130	1.6
				1602	2890	1.7
				1462	2680	1.8
				1342	2480	1.9
Saftey Factor 1.74				1242	2300	2.0
					2120	2.1
					1950	2.2
					1800	2.3
					1650	2.4

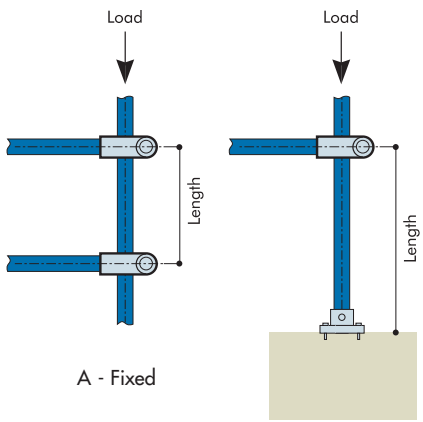

Table 23 gives an indication only of the safe load, in kg., that may be carried between the above restraints by single tubes to BS EN 10255 (ISO 65) when used as uprights.

TEST REPORT: Vibration of Kee Klamp Assemblies

Exhaustive tests on samples of standard size 7 Kee Klamp fittings were performed by an independent research laboratory. The purpose of the test was to evaluate the use of either standard set screws or self-locking set screws.

Test Arrangement

A "Tee" section test assembly was made using three 300mm lengths of galvanized size 7 standard pipe held together by a socket Tee fitting (code 25-7). The vertical leg of the test assembly was supported in a standard railing flange (code 62-7). The completed assembly was then rigidly attached to the vibration table.

The test assembly was initially assembled using standard set screws and tested in this configuration. The standard set screws were then replaced with the locking screws and the tests repeated.

Test Procedure

The test was conducted on a Ling 667 kg Electromagnetic vibration table.

The table was programmed to perform a resonance search between 25 and 350 Hz. and resonant frequencies were recorded and shown in Table 24.

During the resonance search amplification factors, Q, were measured at each resonant frequency, the point of reference being the end of one horizontal pipe. The table was then held at one of the resonant frequencies, set in motion with a controlled acceleration level of 4g, and ran for a period of six hours. This was repeated for three more resonant frequencies in descending order of "Q" factor.

Table 24: Test results

Resonance Frequencies	Q Factor	Running Time
74	1.27	Nil
106	1.27	Nil
158	1.53	6 hours
200	1.8	6 hours
221	5	6 hours
295	9	6 hours

During the twenty-four hours of vibration at the four resonant frequencies above no signs of loosening with either type of attachment screw occurred.

TELESCOPIC RELATIONSHIP

Telescopic relationship between tubes to BS EN 10255 (ISO 65)

Size 9 heavy	- will accept 8 heavy or medium
Size 9 medium	- will accept 8 heavy or medium
Size 8	- no telescopic relationship Requires special spigotting material
Size 7 heavy	- will only accept size 6 light
Size 7 medium	- will accept 6 light, medium and heavy
Size 6 heavy	- no telescopic relationship Requires special spigotting material
Size 6 medium	- will only accept size 5 light
Size 5 heavy	- no telescopic relationship Requires special spigotting material
Size 5 medium	- no telescopic relationship Requires special spigotting material
Size 4	- no telescopic relationship Requires special spigotting material
Size 3	- no telescopic relationship Requires special spigotting material
Size 2	- no telescopic relationship Requires special spigotting material